KOKKUPANEKUJUHEND / ASSEMBLY INSTRUCTION
TÖÖTOOL ANGELO / TASK CHAIR ANGELO 27944, 27945

HOME 4 YOU

1.

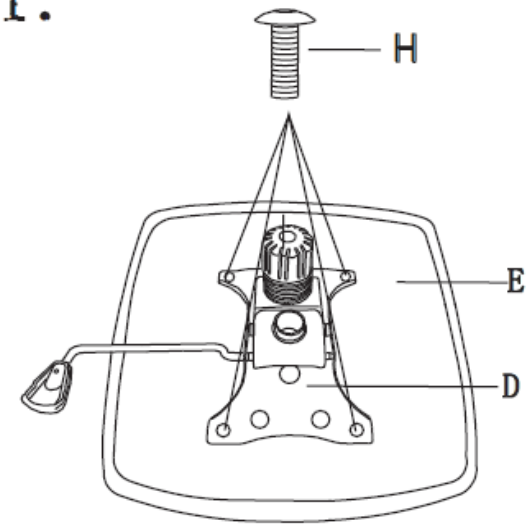

2.

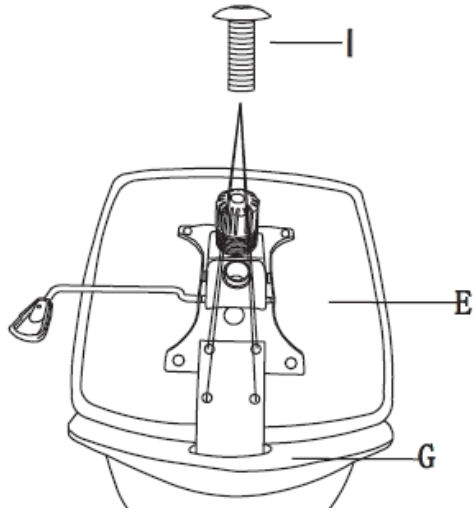

OLULINE: ärge keerake kruvi I kinni enne kui käetoed on paika pandud.
NOTE: do not tighten screws I until the arm rests are centrally positioned.

W-122A-6

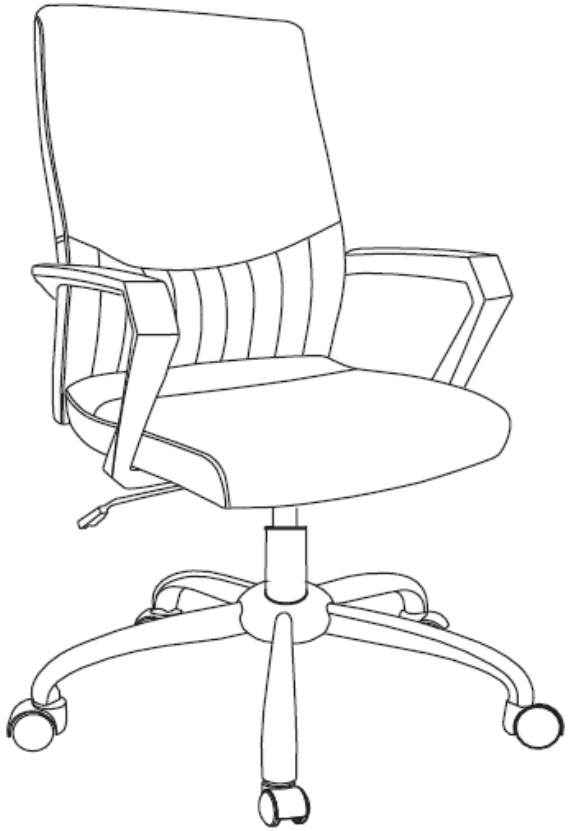

3.

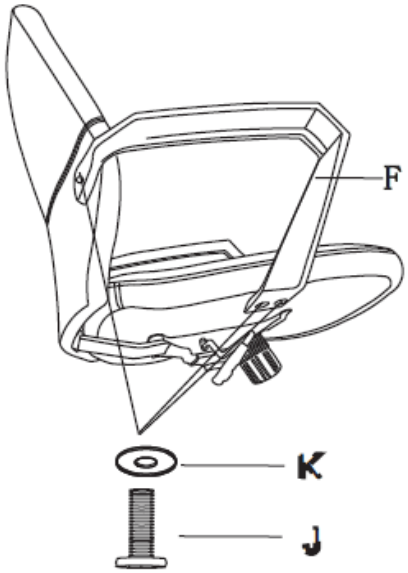

4.

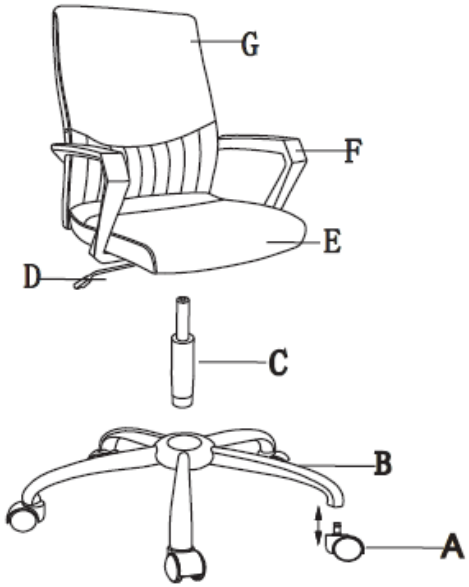

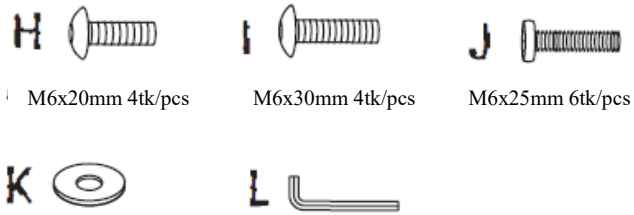

M6x20mm 4tk/pcs | M6x30mm 4tk/pcs | M6x25mm 6tk/pcs

M6x14x1mm 6tk/pcs | M5 1tk/pc

Importija/Importer: AS Evelekt, Linamäe 12, 76406 Saku vald, Eesti / Estonia, www.home4you.com