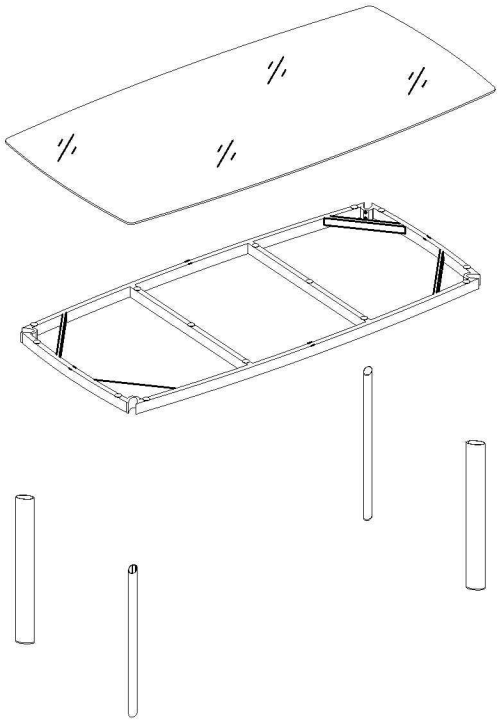
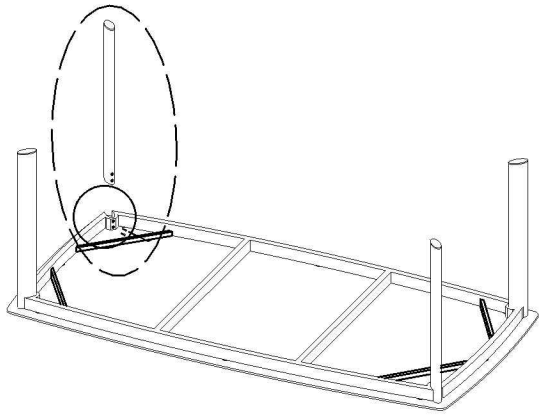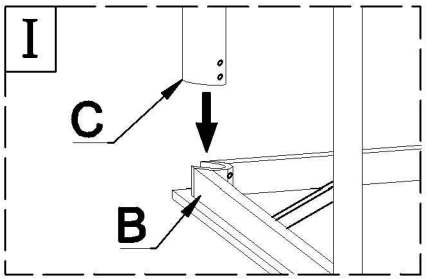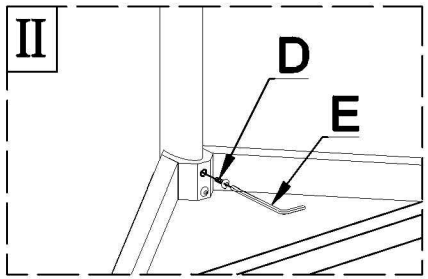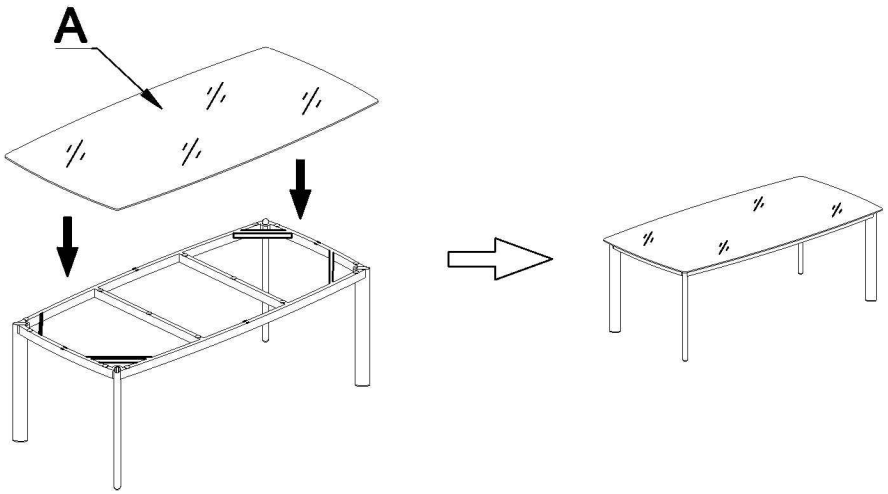
A	B	C	D	E
x1	x1	x4	x8	x1