ASSEMBLY INSTRUCTIONS

LIST							
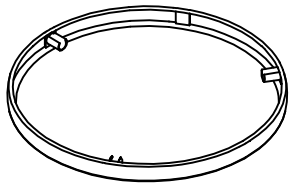	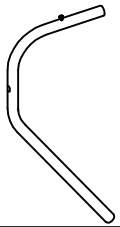		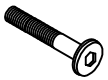				
A X1	B X3	C X1	D X3	E X3	F X3	G X3	H X1

1

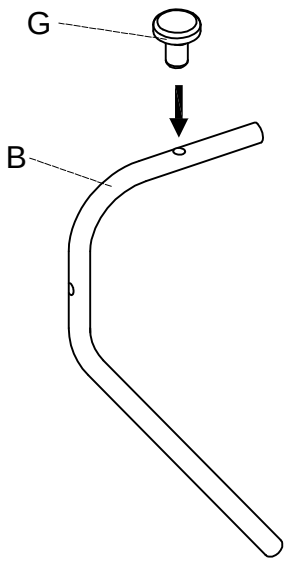

2

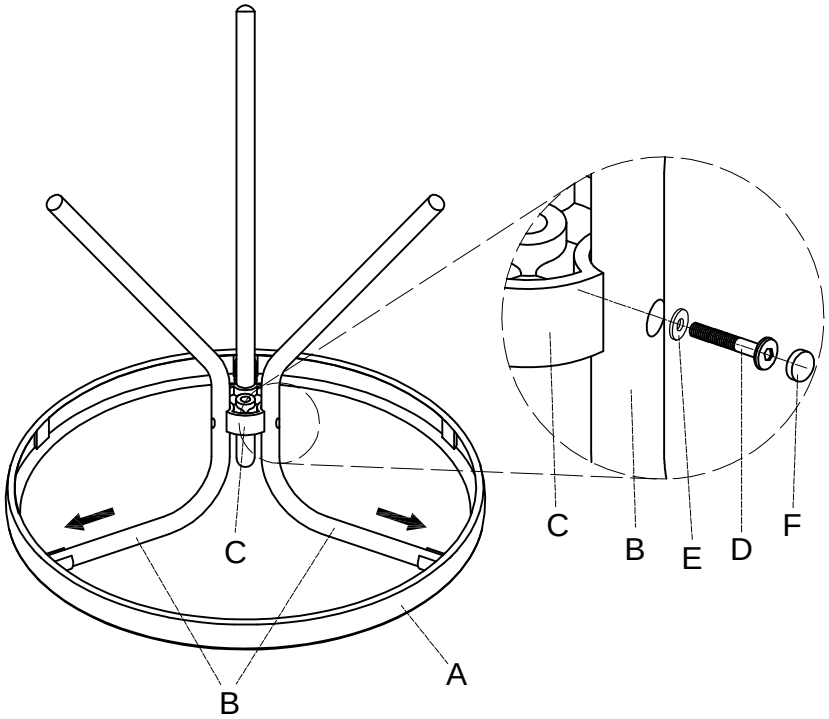
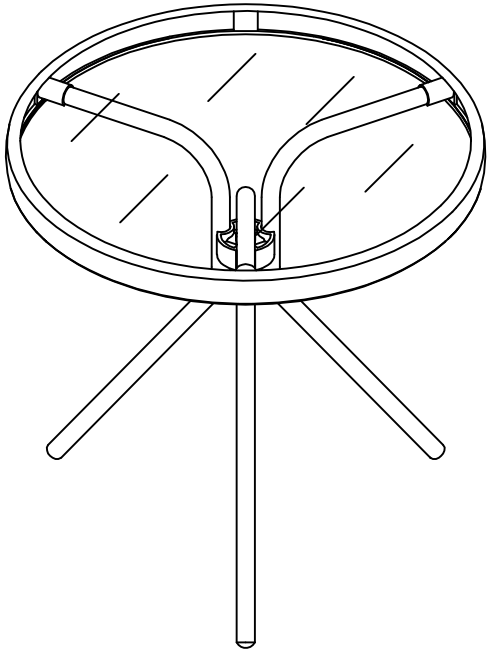
3